PondMAX

WATERGARDENING TO THE MAX

PV SERIES POND & FOUNTAIN PUMP

INSTRUCTION MANUAL



PondMAX USA
info@pondmax.com
www.pondmax.com

VERSION
MAY 2024

MODEL
PV250
PV350
PV550

WELCOME TO THE WORLD OF PONDMAX. YOU MADE THE RIGHT CHOICE INVESTING IN THIS QUALITY PRODUCT. THANK YOU AND ENJOY.

BEFORE USING THIS PRODUCT, PLEASE READ THESE INSTRUCTIONS CAREFULLY AND BECOME FAMILIAR WITH THE UNIT. PLEASE KEEP THESE INSTRUCTIONS IN A SAFE PLACE FOR FUTURE REFERENCE.

TECHNICAL SPECIFICATIONS

DESCRIPTION	PV250	PV350	PV550
MAXIMUM WATER FLOW(GPH)	250	350	550
MAXIMUM HEAD (Ft)	5.5	6.0	6.5
POWER CONSUMPTION* (W)	18	22	35
VOLTS (V)	115	115	115
FREQUENCY (Hz) AC	60	60	60
FRONT FILTER CAGE: FLOW ADJUSTER	Yes	Yes	Yes
INLET Ø NPT THREAD (inch)	1/2	1/2	1/2
OUTLET Ø NPT THREAD (inch)	1/2 (Barb)	1/2	1/2
CABLE LENGTH (Ft)	24	24	24
RECOMMENDED FOUNTAIN KIT**	#10 Jet kit	#30 Jet Kit	#30 Jet Kit
ITEM NO.	22PV030	22PV050	22PV550

* SUBJECT TO VARIATION ACCORDING TO LOAD

** SOLD SEPARATELY

DESIGN HIGHLIGHTS

The PondMAX Pond & Fountain Pumps have been manufactured to provide you with the best quality pumps for your water feature. Visit our website to view our range of pond filtration, outdoor/underwater lighting, water treatments and general accessories.

- Can be used submersible.
- Energy efficient.
- Built-In flow adjustment.
- Robust impeller design and ease of access for maintenance.
- Threaded inlet – Easy to connect an optional PondMAX SP250 Submersible Prefilter.
- 24Ft outdoor cable.

BENEFITS INCLUDE

- PondMAX Pond & Fountain Pumps are suitable for use in many different applications including ponds, fountains and other water feature applications. The pumps can be used in either submersible or in-line applications.
- Your pump has a single moving part (an impeller), enabling easy cleaning and maintenance.
- The motor is totally encapsulated in epoxy resin, ensuring safe operation under water.
- Your pump is magnetically driven and relies on water to cool and lubricate it. Therefore no harmful oil or grease lubrication is required.
- PondMAX Pond & Fountain Pumps are continuous rated, therefore are designed to operate 24/7.
- An optional fountain kit can be purchased and fitted to the models PV250 – PV550 pumps. When using with a fountain kit, it is strongly recommended to purchase a optional PondMAX SP250 Submersible Pre-filter. This assists in straining the particles in the water, to assist the fountain nozzles from becoming blocked up with debris. See your retailer for availability or more information.



IMPORTANT SAFEGUARDS

Correct and safe use of the system requires strict compliance with the safety instructions. For safety reasons, persons less than 16 years of age that are not familiar with these instructions should not use this equipment.

- Any damage to the equipment or unmerited operation will bring dangers to the surrounding precincts. So if there is any damage of the equipment, it must not be used. The equipment should be placed out of reach of children.
- For your own safety, disconnect from the power supply before any maintenance of any equipment is attempted on the tank or water body. Always unplug the pump from the power supply when not in use. Never pull the cable to disconnect the plug from the power supply - grasp the plug and pull to disconnect. If required, have a qualified electrician install a weatherproof power supply point near to the pond or water-feature (within the cable length of the appliance).
- Be sure the equipment is submerged completely in the water. The depth should not be greater than 6.5Ft.
- Do not operate the pump if the appliance or any components of the system, such as the power cable, have been damaged. Check appliance for defects regularly.
- For safety, plug the pump into an electrical outlet with a (GCFI) Ground Fault Circuit Interrupter.
- To avoid an electric shock, do not attach the plug to the power supply socket with wet hands. The drip loop method should be used to prevent water from traveling down the cable and onto the plug or power supply. If the plug does get wet, do not unplug the cable. Disconnect the circuit breaker that supplies power to the power supply point. Then unplug and examine the plug and power supply point for presence of water. If the power point has become wet, you should consult an electrician before using the power point again.
- Do not install or store the appliance where it will be exposed to extreme hot or cold temperatures. Do not use in water above 95°F.
- Do not cut the cable as this will result in voiding your warranty.
- Care should be taken to arrange the power cable so that it cannot be accidentally tripped over or pulled.
- Do not attempt to repair the electrical appliance yourself. Return to an authorized service center or place of purchase if a fault occurs, (regular maintenance is not considered repair and is required by user).

PRODUCT SPECIFIC SAFEGUARDS

- Do not operate the pump without water at any time, permanent damage may occur.
- Pond & Fountain pumps are a magnetically driven pump. Be sure the equipment is submerged completely in the water.
- The pump is designed to be used for ponds, fountains and other fresh water features.
- The pump should only be used in clean water only. Do not use the pump in, or with, any chemicals such as a solvent or gasoline.
- All PondMAX Pond & Fountain pumps are cooled by water flowing through the inside of the motor body. If the pump flow becomes restricted it will overheat and could cause permanent damage. Large tubing size is strongly recommended to deliver adequate water flow to cool the pump. The pump needs to be cleaned regularly to prevent the pump becoming blocked, thus causing the pump to overheat and burn out. This is not a warrantable event. It is strongly recommended not to select a pump that is too small for the job required. The flow rate through the pump needs to be enough so that a half of the rated max flow is kept running at all times.

INSTALLATION

For your convenience we have provided a built in flow control on the Front Filter Screen. This can be used to adjust the water flow if the flow is too fast for a particular installation. These are mainly used in clean water features with no debris.

- It is advised, that when used in an outdoor environment, to integrate an optional PondMAX SP250 Submersible Pre-filter, to provide additional pre-filtration and to protect the pump (available at your local dealer).

PLUMBING GUIDE

For your convenience we have provided two different plumbing installation scenarios.

SUBMERSIBLE USE

- When used inside a pond /fountain environment, follow procedure as outlined below.
- For best results, consult with an expert to make sure you use the correct size of tubing for your pump flow and application.
- Select the outlet hosetail adapter and screw into the top of the pump.
- Now connect the tubing to the hosetail. Remember to use stainless steel hose clamps to fasten the hose

FOUNTAIN KIT SET UP GUIDE

- PondMAX offers optional fountain kits that correlate with these pumps. For suggestions on the correct model, see the specification table on page 2 of this manual.

- **NOTE: For the purpose of these guidelines, a PondMAX #30 Jet kit has been selected below as a sample. The installation principle will be similar for the other types.**

Using the appropriate ½" Nipple/ (1), attach onto outlet of the pump. Now secure the Dual-Control T Piece (2) onto the threaded portion of 1/2" Nipple. Now on the top of the Dual-Control T Piece (2), connect the Threaded Reducing (4) on. Now extend Telescopic Riser with Threaded Locking Nut (10) to the desired height, then secure onto the top (1" thread) of the Threaded Reducing with the threaded locking nut provided. Align Telescopic Riser with Threaded Locking Nut (10) vertically.

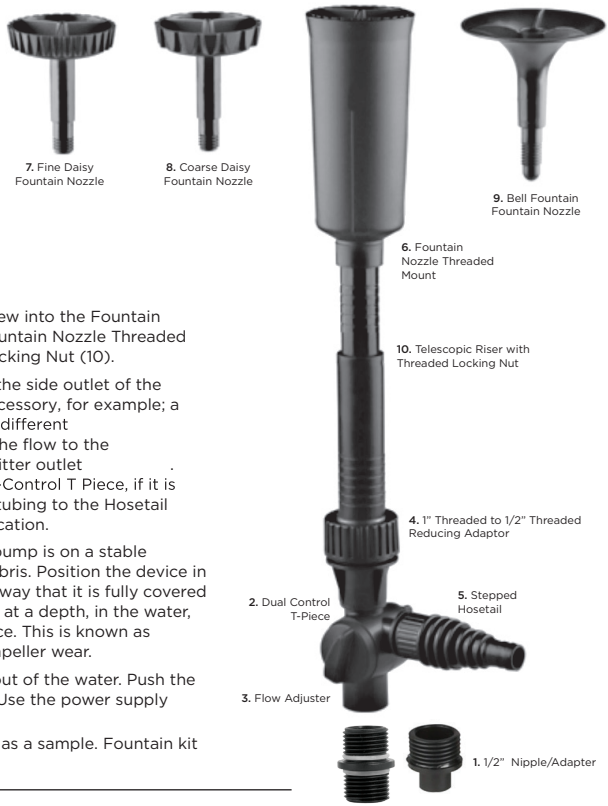

Select the desired nozzle, (7) (8) or (9), and screw into the Fountain Nozzle Threaded Mount. (6) Then attach the Fountain Nozzle Threaded Mount to the Telescopic Riser with Threaded Locking Nut (10).

Locate the Stepped Hosetail (5). Attach this to the side outlet of the Dual-Control T Piece to facilitate an optional accessory, for example; a small waterfall or spitter. Now, utilizing the two different (3), on either side of the T-Piece, you can vary the flow to the fountain head or the optional small waterfall/spitter outlet . Feel free to close off the side outlet of the Dual-Control T Piece, if it is not required. However if it is required, connect tubing to the Hosetail provided and direct the hose to your desired location.

Place the pump in desired location; ensure the pump is on a stable surface that is free of sludge, sand and other debris. Position the device in the pond horizontally, on a solid base, in such a way that it is fully covered with water and ensure that the pump is located, at a depth, in the water, which will not allow it to suck air from the surface. This is known as cavitation. Cavitation is a cause of premature impeller wear.

The fountain nozzle should now be protruding out of the water. Push the plug into the power supply outlet to switch on. Use the power supply

NOTE: PondMAX #30 Jet kit has been selected as a sample. Fountain kit NOT included with pump. Offered seperately.

CLEANING INSTRUCTIONS

Begin by ensuring that the main power supply is disconnected before attempting any maintenance or adjustment of the unit or the water body. Remove the unit from the water. If your unit is connected to a prefilter (optional), it will clog up over time. Please clean regularly (at least once a month) to ensure strong water flow. Failure to maintain the unit could result in a burnt out motor or other damage. This is not a warrantable event.

- All PondMAX Pond & Fountain Pumps are water cooled. If pump becomes restricted, or blocked, it could overheat and cause permanent damage. Regular inspections, cleaning and maintenance of impeller is necessary to ensure longer life.
- If using a fountain kit, take off the fountain set first by unscrewing it from the top of the pump. Examine the nozzles to ensure all ports are unblocked. Clean with a suitable brush if necessary.
- Maintain the filter sponge regularly according to how long it takes for the sponge to get clogged up. When the flow starts to be reduced, check and clean if necessary.
- To unclip the front filter screen from the front of the pump, push in the two tabs on either side of the filter screen and pull away from pump. See below diagram. Take out the sponge (2) and clean. If using an optional submersible pre-filter, disasemble, and wash out pad(s) thoroughly. It is recommended that this is done in a bucket of pond water to ensure the good bacteria that are present in the sponge are not killed by the chlorine in tap water. Check for wear and tear of the sponges. Replace if necessary.
- You can help boost the biological function of your filter sponge with a bacterial additive, available from your local dealer.

IMPORTANT NOTES

- It is important that this procedure is carried out regularly as the cooling path inside the motor could become clogged. If the impeller assembly becomes worn or damaged it should be replaced (available from your dealer or special order). Failure to do so may cause serious damage to pump motor. Inspect for signs for wear and tear. The impeller set is a wearing consumable part. Replace if necessary.
- Once the cleaning and inspection process is completed, reassemble in the reverse manner. Reinstall the shaft, and then carefully slide the impeller onto the shaft. The impeller will pull itself in by magnetic force, this is normal. (Take care not to pinch your fingers). With the impeller in the correct position, carefully place the impeller cover back on, and then rotate clockwise to lock into position. Making sure the ceramic shaft is located properly in the impeller cover center hole.
- Then reinsert the internal sponge back into the filter cage and reattach to the pump or reattach optional pre-filter, which ever is applcable to your application.
- Reattach tubing/fountain kit, submerse in water.

EXPLODED VIEW



1	Front FIlter Screen
2	Sponge
3	Flow Control Knob
4	Volute Assembly
5	O-Ring
6	Impeller Assembly
7	Pump Motor Body
8	Suction Cup Feet x4
9	3/4" Barbed Adapter for Inlet (See "NOTE" below)
10	1/2" Barbed Adapter Fitting (See "NOTE" below)
11	3/4" Barbed Adapter Fitting (See "NOTE" below)

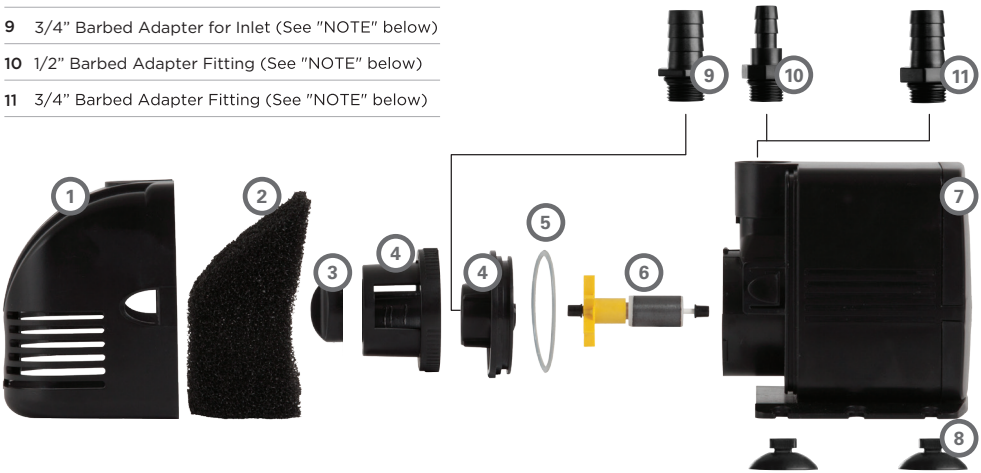

NOTE: Parts and features differ from model to model. All images used are for illustrative purposes only. Not all features depicted apply to all models in the range and these are subject to change.

IMPORTANT

These accessories and attachments are recommended for use with your PondMAX product specified in this manual. The use of any other accessories or attachments might present a risk of injury to persons. Only use the accessory or attachment for its stated purpose.

SPARE PARTS

PART NO.	DESCRIPTION	PV250	PV350	PV
1	Front Filter Screen	31PV032	31PV052	31PV077
2	Sponge			
3	Flow Control Knob			
4	Volute Assembly	31PV031	31PV051	31PV076
5	O-Ring	31PV030	31PV050	31PV075
6	Impeller Assembly			
7	Pump Motor Body			
8	Suction Feet x 4	31PV035		
9	Complete Fittings Kit	31PV033	31PV053	
10				
11				

TROUBLESHOOTING

Problem	Reason	Solution
WATER PUMP NOT WORKING	No power	Check that the plug is connected and power point turned on.
	Sponges and filter media blocked with sludge.	Clean the sponges and filters.
	Impeller is blocked with sludge or lime scale build up.	Clean the impeller as per the instructions.
	Running without sufficient water.	Submerse the equipment underwater then plug in. Refill if necessary.
	Blocked impeller chamber or ceramic shaft is broken.	Clean the impeller. Check for wear. Replace if necessary.
WATER PUMP IS NOISY	Blockage in pump.	Clear the blockage.
	Impeller & shaft worn out.	Replace impeller & shaft.
	Impeller broken.	Replace impeller.
	Water level in feature is too low.	Refill feature with water to appropriate height.
	Unit inlet is blocked or the water pump outlet is blocked.	Clear all blockages.
	The height to which you are pumping is too high for the given model of pump.	Select a bigger model.

LIMITED PRODUCT WARRANTY

- CMT Group LLC, a California limited liability company d/b/a PondMAX™ USA (the "Company") expressly warrants to the original purchaser that, for a period of two (2) years from the date of sale, the covered product (the "Product") will be reasonably free of defects in materials and workmanship and that when property handled, will conform, within accepted tolerance to applicable manufacturing specifications. This Limited Product Warranty ("Limited Warranty") only applies to Company's Products that are used, stored, handled, and installed in the manner recommended by the Company in the Product instruction manual.
- Notwithstanding this Limited Warranty, customer acknowledges that some parts of the Product are consumable and may need to be replaced as part of ongoing Product maintenance, as recommended in the Product instruction manual, and are therefore not covered by this Limited Warranty.
- Company will, at its option, repair or replace Product without charge, if the Product fails or does perform as warranted solely due to a manufacturing defect within the warranty period, subject to the exclusions set forth in this Limited Warranty.
- Repair or replacement during this two (2) year warranty shall not include: reasonable labor charges necessary to repair or replace the defective Product, shipping costs, and packing and insurance costs. During the entire two (2) year warranty, Company's obligation as to repair or replacement shall further be limited to repair or replacement with the models of the Product that are available at the time of the repair or replacement, and shall be limited to the repair or replacement of only the specific Product that fails due to a manufacturing defect. Any repaired or replaced Product shall also remain subject to the original two (2) year warranty from the date of the original sale, and any repair or replacement shall not extend the original warranty period in any manner or start a new warranty period.
- You may obtain coverage under this Limited Warranty by providing Company with proof of original purchase. For service under this Limited Warranty, you must first contact the seller, distributor, retailer, or dealer from whom you purchased the Product and provide the following: copy of original receipt, your name and address, a description of the Product (including the serial number/date code set forth on the Product), and the nature of the defect. To expedite any warranty claims and processing, please submit to us the product registration card included with your purchased Product promptly after your purchase.
- All warranty repairs must be performed by the Company, or a Company authorized third-party. Any repairs performed by you or an unauthorized third-party will not be compensated by Company and are not the responsibility of the Company and will void this warranty.
- DISCLAIMER OF WARRANTIES: Company's Products must be stored, handled, installed, used, and maintained in accordance with instructions provided by Company, and this Limited Warranty is conditioned upon compliance with all such instructions. Copies of the Company's use guide/care guide are included with the Product and available from the Company at the address listed below. You may also obtain these materials by contacting Company at (888) 868-1185 or on the Company's website www.pondmax.com.
- This Limited Warranty does not cover defects caused by:
  - non-compliance with Company's use guides, care guides, and/or instruction manual. Such failures include, but are not limited to, exposure to physical abuse, including, but not limited to chemical abuse (e.g. harsh cleansers and solvents), thermal abuse or shock (e.g. excessive heat or cold), incompatibility of fluid used near the Product, or misuse;
  - improper storage, installation, handling, and/or use of the Product;
  - damage not resulting from manufacturing defects that occur while the Product is in the customer's possession;
  - unreasonable or unintended use of Product;
  - products installed with known or visible manufacturing defects at the time of installation;
  - minor conditions such as stains, scratches, etc.
- Any information or suggestion by Company with respect to the Products concerning applications, specifications, or compliance with codes and standards is provided solely for your convenient reference and are made without any representation as to accuracy or suitability. You must verify and test the suitability of any information with respect to the Products for your specific application.
- THE WARRANTIES SET FORTH IN THIS LIMITED WARRANTY ARE THE ONLY WARRANTIES MADE BY COMPANY IN CONNECTION WITH THE PRODUCT. COMPANY CAN NOT AND DOES NOT MAKE ANY IMPLIED OR EXPRESS WARRANTIES WITH RESPECT TO THE PRODUCT, AND DISCLAIMS ALL OTHER WARRANTIES, INCLUDING, BUT NOT LIMITED TO, ANY WARRANTY OF MERCHANTABILITY OR FITNESS FOR A PARTICULAR PURPOSE. PRODUCTS SOLD BY COMPANY ARE SOLD ONLY TO THE SPECIFICATIONS SPECIFICALLY SET FORTH BY COMPANY IN WRITING. OTHER THAN THE LIMITED WARRANTY SET FORTH HEREIN, COMPANY MAKES NO OTHER WARRANTIES, EXPRESS OR IMPLIED. COMPANY'S SOLE OBLIGATION UNDER THIS WARRANTY SHALL BE REPAIR OR REPLACEMENT OF NON-CONFORMING PRODUCTS. BUYER ASSUMES ALL RISK WHATSOEVER AS TO THE RESULT OF THE USE OF THE PRODUCTS PURCHASED, WHETHER USED SINGULARLY OR IN COMBINATION WITH ANY OTHER PRODUCTS OR SUBSTANCES.
- LIMITATION OF LIABILITY: No claim by the buyer/owner of any kind, including claims for indemnification, shall be greater in amount than the purchase price of the Product in respect to which damages are claimed. IN NO EVENT SHALL COMPANY BE LIABLE TO BUYER/OWNER IN TORT, CONTRACT OR OTHERWISE, FOR ANY SPECIAL, INDIRECT, INCIDENTAL, CONSEQUENTIAL, RELIANCE, STATUTORY, SPECIAL, PUNITIVE OR EXEMPLARY DAMAGES, INCLUDING, BUT NOT LIMITED TO, LOST PROFITS, LOSS OF USE, LOSS OF TIME, LOSS OF REVENUES, INCONVENIENCE, LOSS BUSINESS OPPORTUNITIES, DAMAGE TO GOOD WILL OR REPUTATION, OR LOSS OF DATA, EVEN IF ADVISED OF THE POSSIBILITY OF SUCH DAMAGES OR SUCH DAMAGES COULD HAVE BEEN REASONABLY FORESEEN, IN CONNECTION WITH, ARISING OUT OF, OR AS A RESULT OF, THE SALE, DELIVERY, SERVICING, USE OR LOSS OF USE OF THE PRODUCT SOLD HEREUNDER, OR FOR ANY LIABILITY OF BUYER TO ANY THIRD PARTY WITH RESPECT THERETO.
- All provisions of this Limited Warranty are severable and if any provision shall be deemed invalid, the remaining provisions shall remain in full force and effect.
- Please consult your retailer for quality original Company replacement parts.
- Visit www.pondmax.com for your nearest dealer.
- Contact Information:
  - Any question concerning this warranty should be addressed to:
    PondMAX USA
    P.O. Box, 341
    San Leandro, CA 94577
    Phone: 888.868.1185
    Email: info@pondmax.com
    Website address: https://pondmax.com