PondMAX

WATERGARDENING TO THE MAX

SOLAR
POWERED PUMP KIT

INSTRUCTION MANUAL

DATE
OCT 2017 v1.0

TOLL FREE 888.868.1185

MODEL
PM150SP
PM350SP

CONGRATULATIONS ON YOUR PURCHASE OF THIS PRODUCT BY **PONDMAX**, THE ANSWERS FOR YOUR WATERGARDEN MADE EASY.

TECHNICAL SPECIFICATIONS

Description	PM150SP	PM350SP
MAX WATER FLOW IN FULL SUN	160 GPH	360 GPH
MAX PUMP HEAD IN FULL SUN	5.6ft	6.9ft
MAX PUMP POWER CONSUMPTION	6.5W	11W
MAX PUMP VOLTAGE	12V-24V	12V-24V
DRY-RUN PROTECTION	YES	YES
ELECTRICAL CURRENT TYPE	DC	DC
SOLAR PANEL MAX POWER OUTPUT	10W/18V	20W/18V
CABLE LENGTH	16ft	16ft
BUILT-IN FLOW ADJUSTER	YES	YES
OUTLET Ø	3/8” PUSH FIT	1/2” MALE THD.
FOUNTAN NOZZLE KIT INCLUDED	YES	YES
RECOMMENDED TUBING SIZE ID	3/8”	1/2”
PRODUCT ORDER CODE	22PS560	22PS565

* SUBJECT TO VARIATION ACCORDING TO LOAD.

DESIGN HIGHLIGHTS

The PondMAX DC Solar Pumps have been manufactured with advanced technology to provide you with the best quality Solar pumps for your water feature. Visit our website to view our range of outdoor/underwater lighting and water gardening accessories.

- Advanced design with brushless, DC current motor.
- The built in Flow adjuster on the front of the pump can alter the water flow rate of the pump.
- Dry-run protection – will automatically cut power to the pump on low water level.
- Long life Impeller Design – Ceramic shaft is wear resistant and self-lubricated by water.
- Energy Efficient – Runs directly off energy from the sun via the solar panel.
- Eco Friendly – Exceptional low noise rating with low mechanical vibration.
- Tool-less Assembly for Easy maintenance. No special tools required.
- Easy to install due to the Plug and Play plug design and Extra Low Voltage Electrical system.
- Multiple fountain nozzles included for different effects.

PMAX US Solar Pumps Instructions.indd 2 15/11/17 1:07 pm

PM150SP / PM350SP
SOLAR PANEL & SUBMERSIBLE PUMP KIT

BENEFITS

PondMAX DC Solar Pumps are suitable for use in many different applications including water fountains, water features and bird baths. Your pump has a single moving part (an impeller set) enabling easy cleaning and maintenance.

- The Pumps have intelligent circuitry that analyses the water level alongside the pump and will sense a low water state, thus minimizing motor burnout, due to electrical heat, through lack of water flow through the motor.
- The motor and electrical components are totally encapsulated in epoxy resin, ensuring safe operation under water.
- The pump has a robust bearing and shaft design so no oil/grease lubrication is required.
- PondMAX DC Solar Pumps are continuous rated therefore are designed not to demand short breaks for cooling purposes.

IMPORTANT SAFEGUARDS

Please read these instructions and familiarize yourself with the equipment before placing it in service. Correct and safe use of the system requires strict compliance with the safety instructions. For safety reasons persons less than 16 years of age or people that are not familiar with these instructions should not use this equipment.

- Any damage to the equipment or unmerited operation will bring dangers to the surrounding precincts. So if there is any damage of the equipment, it must not to be used.
- For your own safety, disconnect from the power supply before any maintenance of any equipment is attempted on the tank or water body. Always unplug the pump from the Solar Panel when not in use. Never pull the cable to disconnect the plug - Grasp the plug and pull to disconnect.
- Be sure the pump is completely submerged in the water, but no greater than 3ft.
- Do not operate the pump if the appliance or any components of the system, such as the power cable, have been damaged. Check appliance for defects regularly.
- Do not cut the cable as this will result in voiding your warranty.
- Do not install or store the appliance where it will be exposed to extreme hot or cold temperatures. Do not use in water above 95°F.
- Care should be taken to arrange the power cable so that it cannot be accidentally tripped over or pulled.
- Do not attempt to repair the electrical appliance yourself. Return to an authorized dealer or place of purchase if a fault occurs, (regular maintenance is not considered repair and is required by user

PRODUCT SPECIFIC SAFEGUARDS

- Do not operate the pump without water at any time, permanent damage may occur.
- Be sure the equipment is submerged completely in the water.
- The pump is designed to be used in fresh water. It is not to be used in any other manner or purpose. The pump should only be used in clean water. Do not use the pump in, or with, any chemicals such as a solvent or gasoline.
- PondMAX DC Solar Pumps are cooled by water flowing through the inside of the motor body. If the pump flow becomes restricted it will overheat and could cause permanent damage. The pump needs to be cleaned regularly to prevent the pump becoming blocked, thus causing the pump to overheat and burn out. This is not a warrantable event.
- Do not connect the pump to any AC voltage power supply. It is only to be supplied with DC power within the voltage range stated in the specification table.
- The solar panel is made with glass components. Do not drop strike or crush the solar panel. It will break. The solar module should only be cleaned with soft tissue or glass cleaning solutions.
- It is never recommended to select a pump that is too small for the required application.

INSTALLATION

The solar pump is designed for indoor and outdoor applications, and is powered by a solar panel. In order to make the pump work, the solar panel needs to be placed in direct sunlight. The performance of the pump also depends on the sunlight intensity and the angle at which sunlight contacts the panel. If the panel does not receive direct sunlight the pump will not operate. However if you need the pump to operate on either foggy days or at night time, PondMAX offers a Solar Battery Backup separately as an option, but is not required. It's designed to store surplus solar energy during daylight, for use on either foggy days or at night. A fully charged battery backup can solely operate solar pump for 3-4 hours.

The pump has the build-in function of dry-run protection. The dry-run protection function is provided by two sensor points on one side of the pump housing (see Diagram). The pump works if both of the points are submerged in water. If either or both of the points are out of water, the pump stops working.

The motor unit of the pump is encapsulated with epoxy resin and does not need lubrication. Regular inspections, cleaning and maintenance of impeller is necessary to ensure longer life.

In the center of the impeller you may notice a small hole opening that protrudes through the ceramic shaft from front to back. It is paramount that this portal is kept unblocked at all times. This is a cooling channel for the motor.

The pump flow rate can be adjusted by the flow valve on the front of the pump.

PMAX US Solar Pumps Instructions.indd 4 15/11/17 1:07 pm

ASSEMBLING THE FOUNTAIN KIT (OPTIONAL)

- If you wish to use the fountain nozzle kit for your application, fit a selected nozzle and extension tubes on the top of the pump outlet by pushing or screwing (depending on the model). There are different nozzles for different fountain effects. To produce the fountain effect, it is best practice for the fountain head or nozzle to be position 2”-4” above the water surface. It is best to keep the pump off the waterfeature base to avoid drawing the waste and debris into the pump, otherwise it may lead to a blockage in the pump. A household brick is sometimes used for this purpose.
- If you choose to connect tubing to the pump instead of the fountain kit, we recommend using one of the adapters from the fountain kit to push inside 1/2” hose. You may need to utilize hot water to soften the tube and expand the diameter to fit over the riser end. Remember to use Stainless Steel hose clamps to fasten the hose on to the Hosetail. This is to ensure that the pipe does not blow off at a later time or leak at this point in the plumbing system. Direct the hose in your desired direction.
- Place the pump in desired location. Ensure the pump is on a stable surface that is free of sludge, sand and other debris. Do not place the pump directly on the water feature floor or in mud. It is recommended to place the pump on a raised surface.
- Electrically connect the pump to the solar panel, and tighten the protection nut.

ASSEMBLING THE SOLAR PANEL

- Install the solar panel in garden lawn or soft ground by inserting the spike into the ground. Adjust the orientation of the panel to face the panel towards the sun and then tighten the screw on the back of the panel to secure.
- Make sure to keep the pump fully submerged in water while the pump is in operation.
- The solar pump should now operate.

ASK ABOUT THE PONDMAX SOLAR BATTERY BACKUP, WHICH IS OFFERED SEPERATELY! IT'S DESIGNED TO STORE SURPLUS SOLAR ENERGY DURING DAYLIGHT, FOR USE ON EITHER FOGGY DAYS OR AT NIGHT TIME. A FULLY CHARGED BATTERY BACKUP CAN SOLELY OPPERATE A SOLAR PUMP FOR 3-4 HOURS.

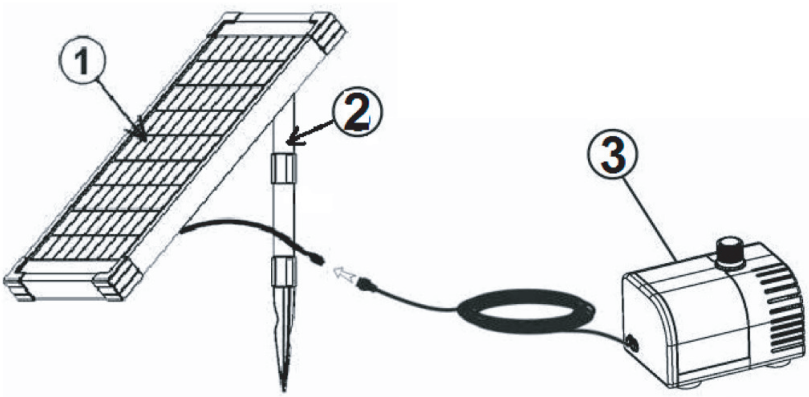

PMAX US Solar Pumps Instructions.indd 5 15/11/17 1:07 pm

CLEANING INSTRUCTIONS

Begin by ensuring that the power supply is disconnected from the solar panel before attempting any maintenance or adjustment of the unit. Remove the unit from the water. The filters and sponges will clog up over time.

Please clean regularly (at least once a month) to ensure strong water flow. Failure to maintain the unit will result in a burnt out motor and other damage. All PondMAX DC Solar Pumps are water cooled, if pump becomes restricted, or blocked, it will overheat and could cause permanent damage. When the flow starts to be reduced, check and clean if necessary.

The motor unit of the pump is encapsulated with epoxy resin and does not need lubrication. Regular inspections, cleaning and maintenance of impeller is necessary to ensure longer life

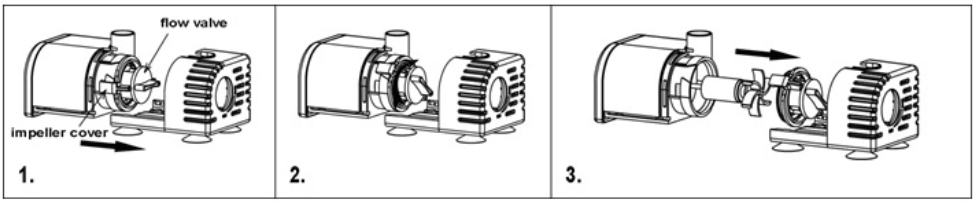

1. Disconnect the tubing/fountain kit from off the pump.
2. Press on the bottom of the filter housing, and meanwhile move the filter housing apart from the pump.
3. Turn the impeller cover together with flow valve clockwise to the end and then carefully pull the impeller cover, together with flow valve, apart from the pump.
4. Lift out the impeller assembly. (Take care not to break ceramic shaft.) Clean the impeller with clean water and a suitable brush taking note to remove fine sediment on and around the back end of the impeller. Replace the impeller if necessary.
5. Clean the housing and pump with a suitable brush, taking care to clean off sludge, algae and debris.
6. Assemble the pump in reverse sequence.
7. Reconnect the pump as before.

*Be careful not to drop the ceramic shaft while cleaning the impeller, it is fragile.

IMPORTANT NOTES:

It is important to ensure that this is carried out regularly as the cooling path inside the motor will become clogged. If the impeller assembly becomes worn or damaged it should be replaced (available from an authorized PondMAX Dealer). Failure to do so may cause serious damage to pump. Inspect for signs of wear and tear. The impeller set is a consumable part.

PMAX US Solar Pumps Instructions.indd 6 15/11/17 1:07 pm

PM150SP / PM350SP
SOLAR PANEL & SUBMERSIBLE PUMP KIT

SPARE PARTS

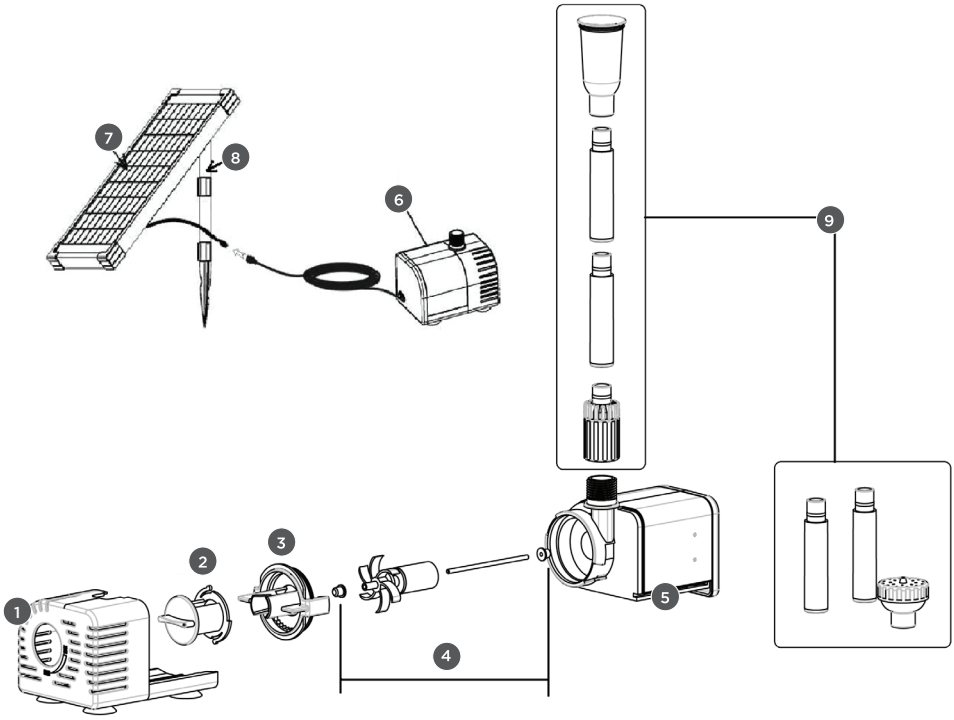

Part No.	Description	PM150SP	PM350SP
1	Filter Housing	31SP352	31SP353
2	Flow Adjuster - Removable	31SP358	31SP359
3	Impeller Cover		
4	Impeller and Shaft Assembly	31SP356	31SP357
5	Motor Body only	N/A	
6	Solar Pump Only - not all parts included with this model	31SP350	31SP351
7	Solar Panel Only	31SP362	31SP363
8	Solar Panel Mounting Kit	31SP364	31SP365
9	Fountain kit - inc. Threaded Adaptor, Riser, & Fountain Nozzles	31SP360	31SP361

TROUBLESHOOTING

Problem	Reason	Solution
Water Pump Not Working	No Power	Check that the plug is connected and turned on
	Impeller is blocked with sludge or limescale	Clean the Impeller as per the instructions
	Running without sufficient water	Submerse the equipment underwater then plug in. Refill if necessary.
	Blocked Impeller chamber or ceramic shaft is broken	Clean the Impeller. Check for ware. Replace if necessary.
Water Pump is noisy	Blockage in pump	Clear the blockage
	Impeller & Shaft worn out	Replace Impeller & Shaft
	Impeller broken	Replace Impeller
	Flow adjuster set to minimum	Open the flow adjuster and allow water to flow
	Unit inlet is blocked or the water pump outlet is blocked	Clear all blockages
	The height to which you are pumping is too high for the given model of pump.	Select a bigger model of pump

PMAX US Solar Pumps Instructions.indd 8 15/11/17 1:07 pm

PM150SP / PM350SP
SOLAR PANEL & SUBMERSIBLE PUMP KIT

WARRANTY

- The PondMAX Solar Pump Kits are warranted to the initial purchaser, to be free of defects in materials and workmanship at the time of initial purchase, for a period of 1 year. In the event this product malfunctions within 1 year from the date of purchase, the sole obligation of PondMAX USA (hereinafter referred to as PondMAX™) will be to repair the unit or replace with an equivalent new or factory refurbished unit at PondMAX's discretion, subject to the following conditions:
- The malfunction is proved attributable to a defect in materials or workmanship, including repairs performed under this warranty. Malfunction for any other reason-including but not limited to misuse, negligence, accident, or tempering with parts, incorrect wiring, or improper installation-will not be remedied under this warranty.
- PondMAX™ specifically does not guarantee chemical compatibility, and expressly does not warrant units from any problems caused by use in liquids other than clean water.
- All warranty repairs must be performed by PondMAX™ or a PondMAX™ authorized company. Purchaser must retain the purchase receipt and present it with this certificate as proof of ownership and entitlement to warranty repairs. Unauthorized repairs will not be compensated by PondMAX™, and are not the responsibility of PondMAX™. and if such repairs damage the product, such damages are not remedied under this warranty.
- Purchaser shall bear all shipping, packing and insurance costs and all other costs, excluding labor and parts necessary to effectuate repairs under this warranty.
- Periodic check-ups are not covered by this warranty.
- This warranty is in lieu of all other express warranties which now or hereafter might otherwise arise with respect to this product. Any and all limited warranties, including the warranties of merchantability and fitness for particular purpose, shall have no greater duration than the duration period of the express written warranty applicable to this product, and shall terminate automatically the expiration of such duration period. Some states do not allow limitations on how long an implied warranty lasts, so the above limitation may not apply to you. No action shall be brought for breach of any implied or express warranty after one year subsequent to the expiration of the duration period of the express written warranty.
- Incidental and consequential damages caused by malfunction, defect, or otherwise, and with respect to breach of any express or implied warranty, are not the responsibility of PondMAX™, and, to the extent permitted by law, are hereby excluded for property damage, loss of livestock and, to the extent not unconscionable, for personal injury damage. Some states do not allow the exclusion or limitation of incidental or consequential damages, so the above limitation or exclusion may not apply to you.
- This warranty does not apply to any malfunction arising out of any application of this product other than normal use, unless such application is upon request specifically approved in writing by PondMAX™.
- The provisions of this warranty are severable and if any provision shall be deemed invalid, the remaining provisions shall remain in full force and effect.
- Rights under this warranty are not assignable without the express prior consent in writing by PondMAX™ and, regardless of the terms of such consent in writing, such assignee shall have no greater rights than his assignor had against PondMAX™. The Warranty is given by PondMax USA, PO. Box 341, San Leandro, CA 94577; contactable by phone (toll free 888.868.1185) or email (info@pondmax.com).

Please consult your retailer for quality original PondMAX replacement parts.
Visit www.pondmax.com for your nearest dealer.

PMAX US Solar Pumps Instructions.indd 9 15/11/17 1:07 pm

NOTES

PMAX US Solar Pumps Instructions.indd 10 15/11/17 1:07 pm

NOTES

PMAX US Solar Pumps Instructions.indd 11 15/11/17 1:07 pm

WATERGARDENING TO THE MAX

PONDMAX USA
Toll Free 888.868.1185
email: info@pondmax.com
www.pondmax.com